Northern California Soaring Association

N132SS System Documentation

April 2018

John J. Scott

Table of Contents

History

During the month of March 2018 I performed a major refurbishment of the electrical and pitot static systems of 2SS. The new electrical and plumbing diagrams are included in this document. The instrument panel was completely disassembled, re-wired, re-plumbed, and then reassembled. The following is a list of accomplished tasks:

- Installed new fuse block for branch circuits
- Installed new LiFePO3 battery with Powerpole connectors
- Powered Cambridge units and gear warning system as dedicated branch circuits
- Added circuit and power cord for Power Flarm
- Fabricated a new wiring harness for radio and all connections
- Installed new Mic and Phone jacks
- Installed a new radio external speaker
- Installed a new functioning radio
- Modified panel to add a Ram mount and USB power port
- Installed new pressure regulator

Description of Work

The comm radio did not work and was removed. The old wiring harness was a jumper cord designed to convert from the old radio connector (AR3201; DB15) to the newer radio (AR4201; DB25). This harness was a bit rough looking and was in need of replacement. The old configuration had 3 panel mounted fuses, an inline fuse for the Cambridge units, and no fuse protection at all for the gear warning circuit. The new configuration has an eight (8) position fuse block of which six (6) positions are used. The remaining two (2) positions hold spare fuses. See circuit diagram.

The new Lithium battery should extend battery life. The club is converting from XLR audio connectors to Anderson Powerpole connectors. This was done for 2SS.

2SS has three (3) independent sets of static ports. Two side by side sets up front and a

set of holes in the back boom. Nobody, including the documentation manuals, could explain to me why there are three sets of static ports. As it came to me, the rear static system was capped off and the two front systems came up as independent static lines to run the instruments. I joined the two front systems together down below and brought up a single static line for the instruments. See Pitot Static diagram. The old and new tubing follow the standard color code system (Green=Pitot, Red=TE, Yellow=Capacity; Clear=Static).

Brian Roach also worked on this project. We removed the old pressure regulator and old speaker. Brian purchased a new regulator and I installed a new speaker. Brian also did some structural refurbishment work on the back separation panel.

All new wire is aircraft grade mil spec wire. Most joints are soldered with heat shrink tubing. Terminals are higher grade nylon (not vinyl) crimp connectors. The new speaker is an 8 Ohm encased unit purchased from Wings and Wheels and mounts nicely to the side wall of the cockpit. There was some debate about whether or not to ground the electrical system to the metal frame of the glider. Steve Radcliffe said "No" so we didn't.

Prior to starting this project there was a meeting of the "Radio Group" to discuss objectives and guidelines. The lithium battery and Powerpole connectors were decided in this meeting. The use of an internal fuse block was also agreed to in this meeting (as opposed to circuit breakers reachable in flight). It was also agreed to protect the battery with either a fuse or a non-self-resetting circuit breaker. It was agreed that the speaker would be wired permanently on (no switch). The lithium battery is rated for 20 amps. It is protected with a 15 amp fuse. All branch circuits are protected with 5 amp fuses. To minimize voltage drops, all wire current ratings exceed these fuse amp ratings. The battery supply wires are 16 AWG and all branch circuits are either 18 or 20 AWG.

The new wiring harness DB25 connector was assembled using mil spec crimp pins rather than soldering which is common for less experienced technicians.

The instrument panel went to a machine shop to be modified. Several unused holes were filled. The panel was modified to add the USB power port and a Ram mount. The original plan was to have the panel sand blasted and then powder coated. However,

the paint had to be removed for the sheet metal mods so the original paint was removed with paint stripper. The lead time to powder coat was 2 weeks and we did not want to wait that long so the panel was spray painted using an SEM product (Storm Gray 15763) and then covered with a satin clear coat.

Future Considerations

When we first started this project we wondered how best to gain access to the lower radio bay. At first we thought that one of the vertical side panels could be removed for access. They cannot, they are structural. The proper way to work on 2SS is to start at the top and start removing components until you get down to where you need to go. If you need to get to get to the lower radio harness you will need to gut the panel. This is not as bad as it sounds. The panel can be completely disassembled in a couple of hours.

If the lower radio just needs to be changed, this can be done by reaching in from the rear, although long arms will be very helpful. The radio harness was made with a large amount of excess slack (i.e. a service loop). The excess harness is secured with tie wraps which will need to be cut. The harness is long enough to reach outside the panel so that a "test" radio can be plugged in. For future troubleshooting, this will allow us to determine if a problem is with the installed radio or with the glider wiring. To facilitate this access the power distribution panel was designed to tilt up in the front. All the wiring enters the panel from the rear thus allowing the front to tilt up. After removing the blocking instruments, simply remove the front two screws and tilt the panel up.

Electrical Circuit Diagram

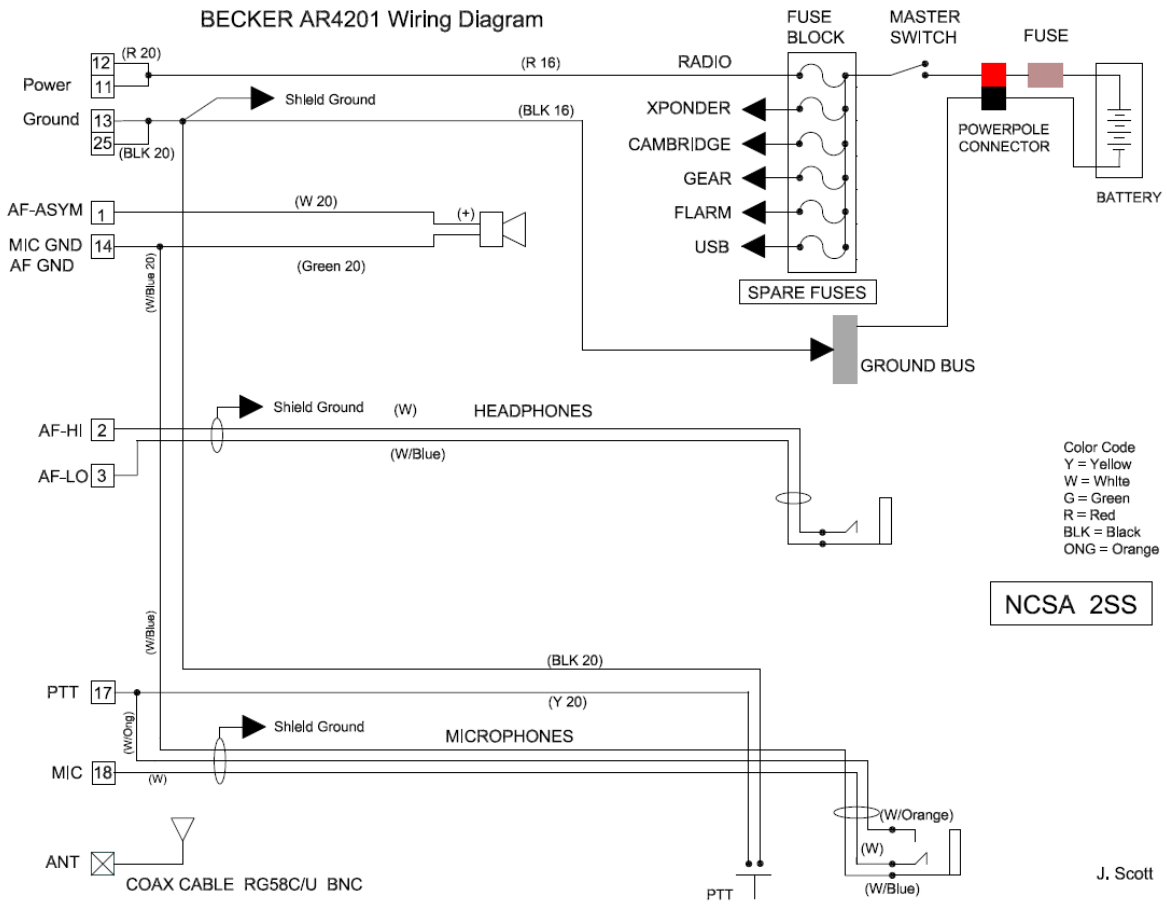

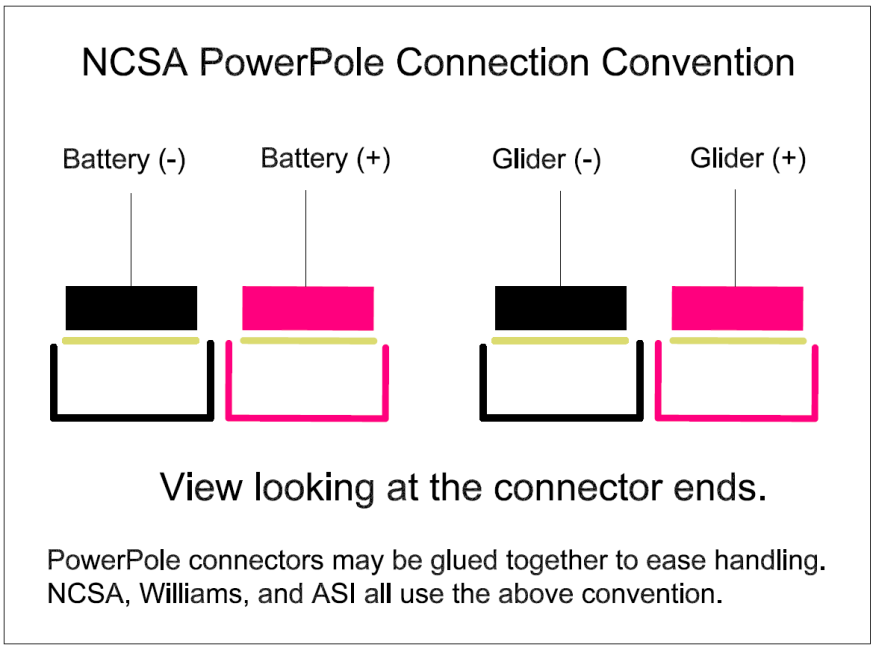

Pitot Static Diagram

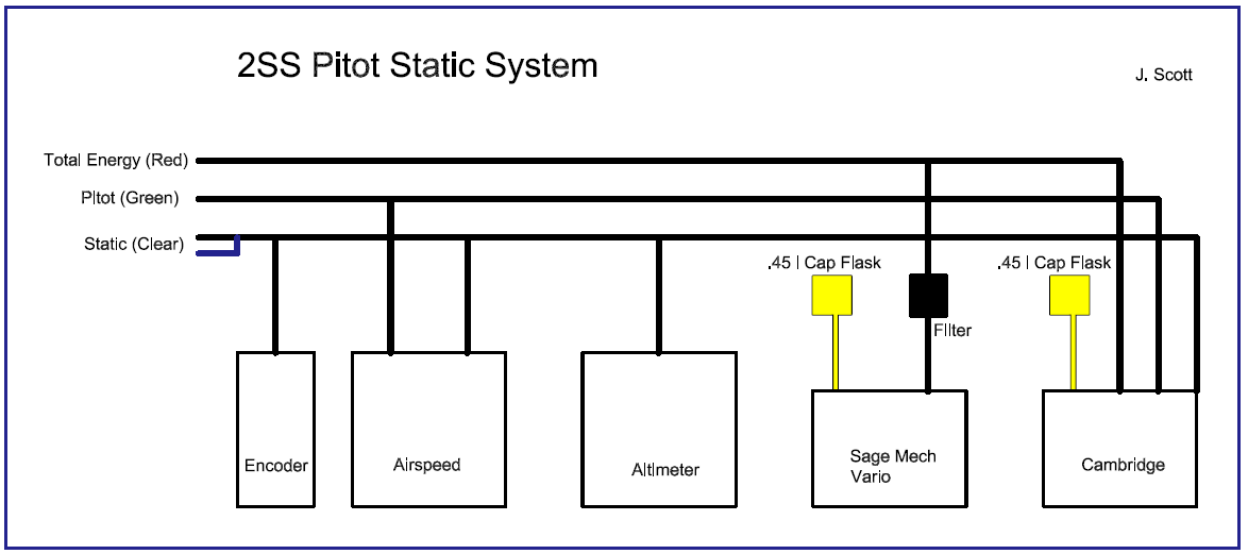

New Photos

New Panel

2SS has a dual set of static ports in front; two (2) holes on each side.

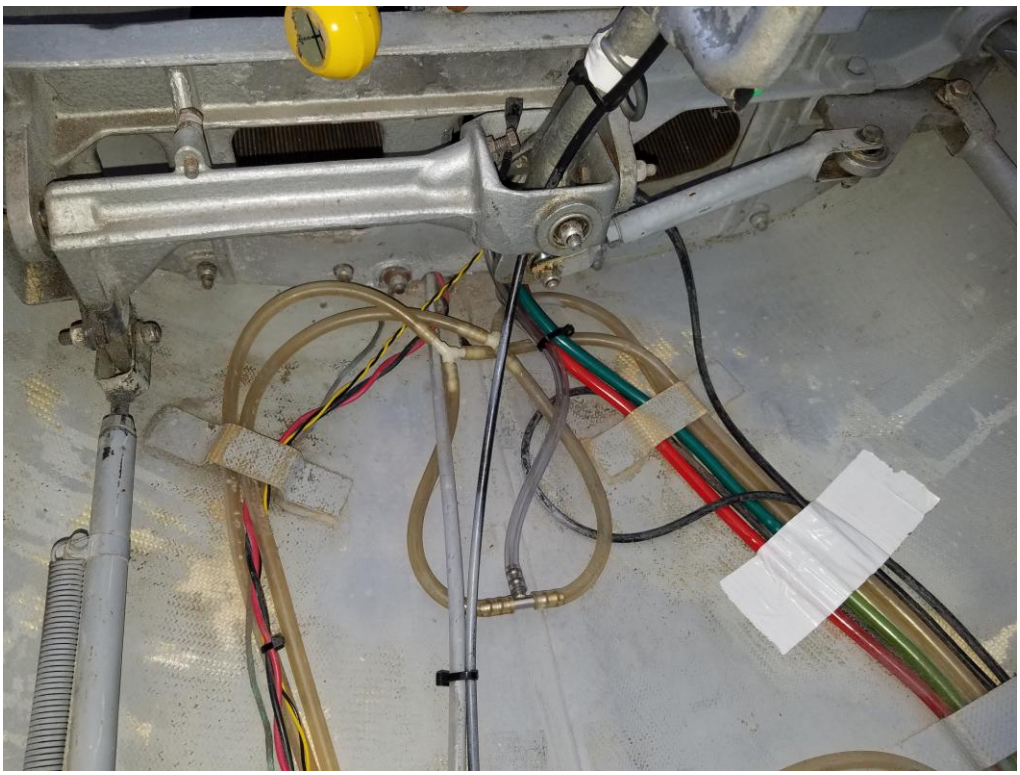

All four (4) forward static ports are plumbed together to a single static tube that then goes to the instruments.

Rear static line is capped off.

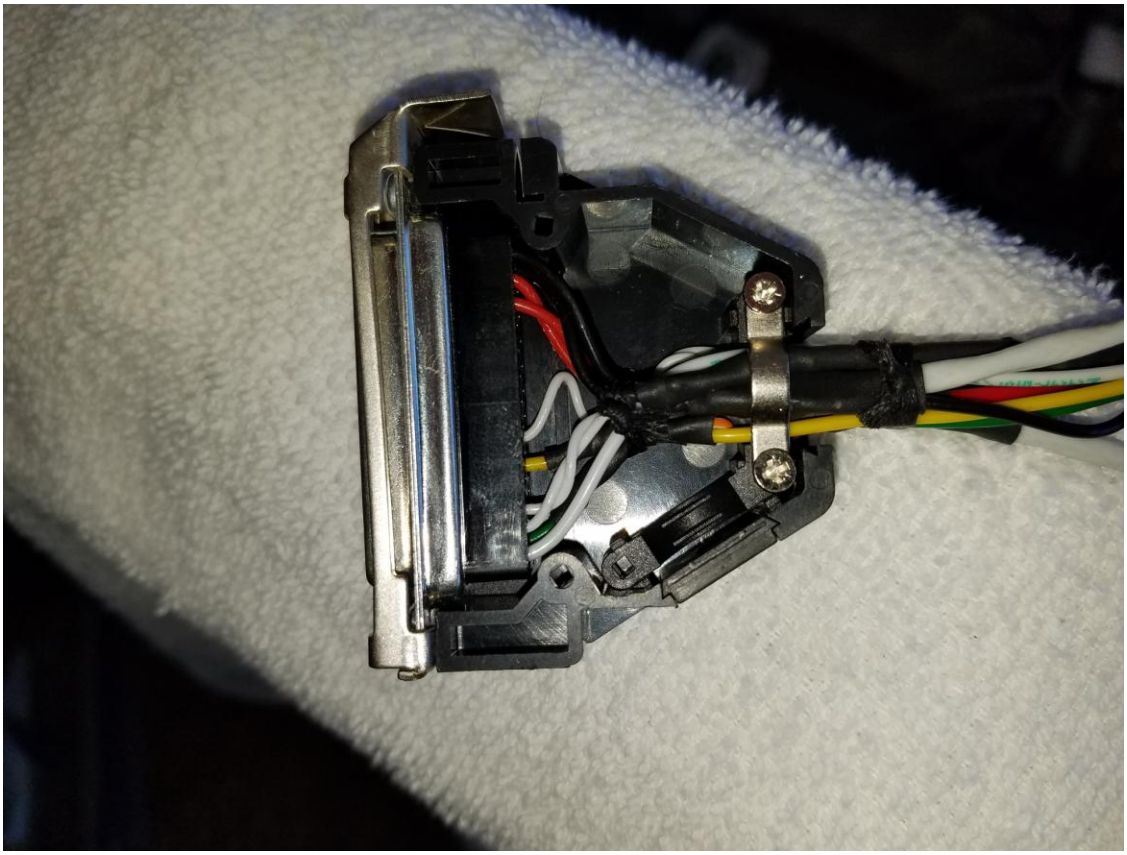

New harness.

New power distribution panel.

Finished Product

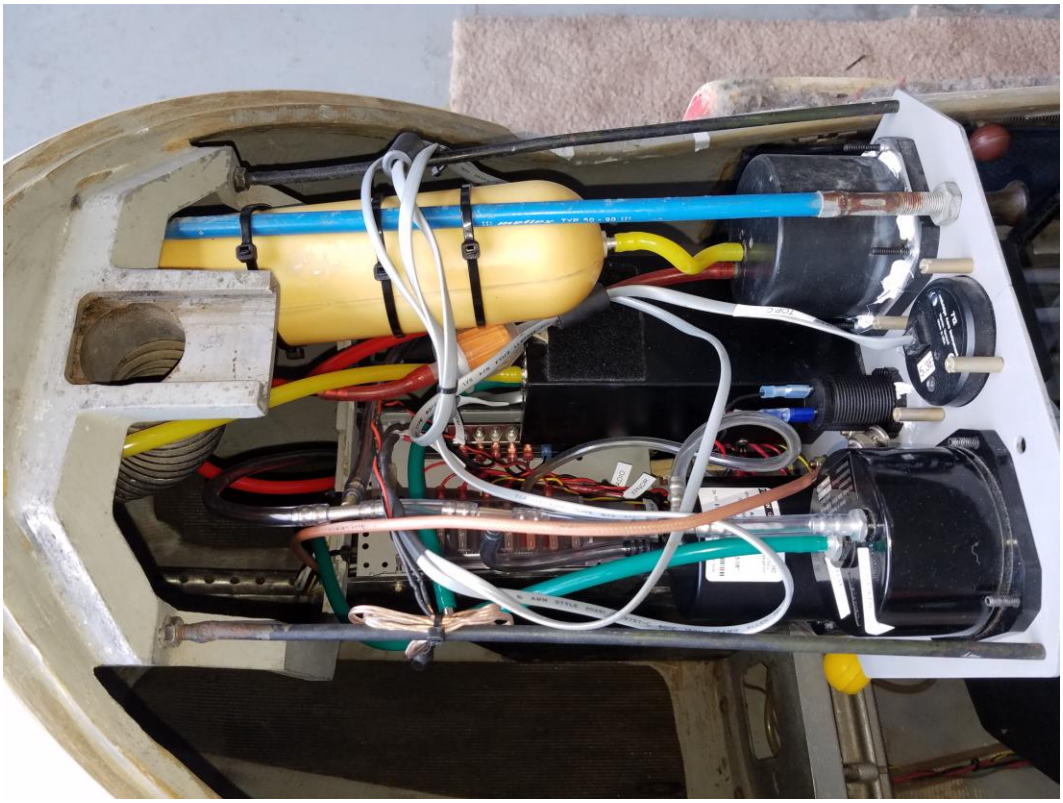

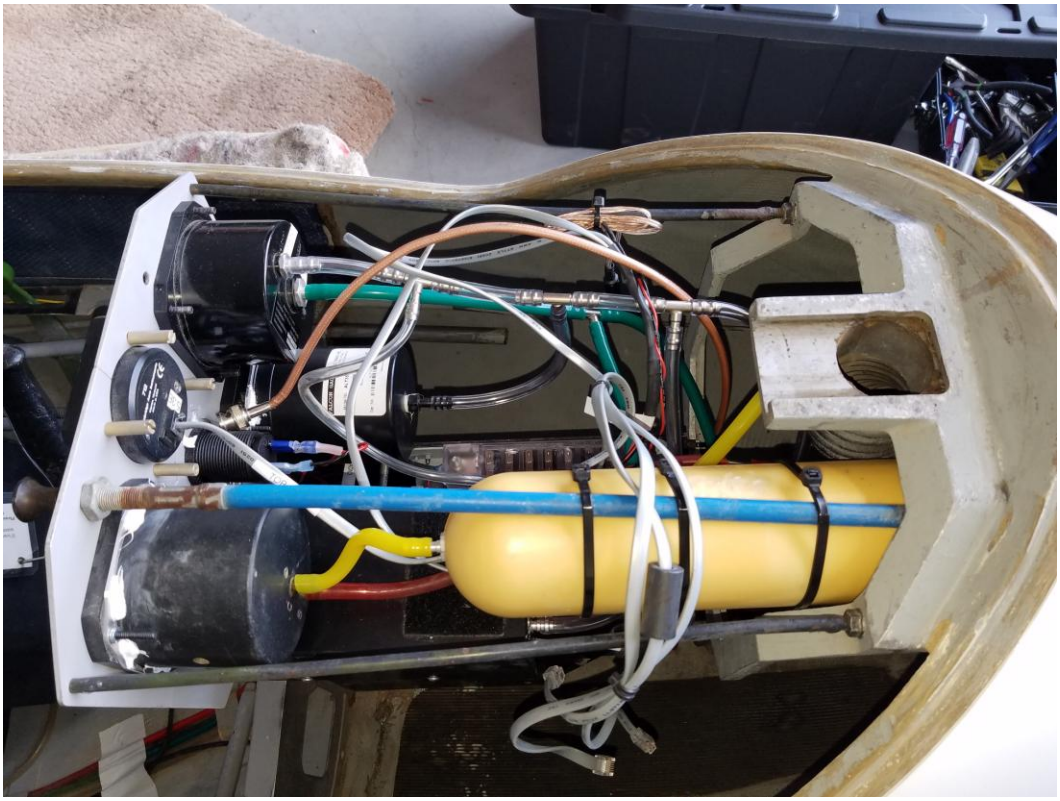

Old Photos

Old Panel

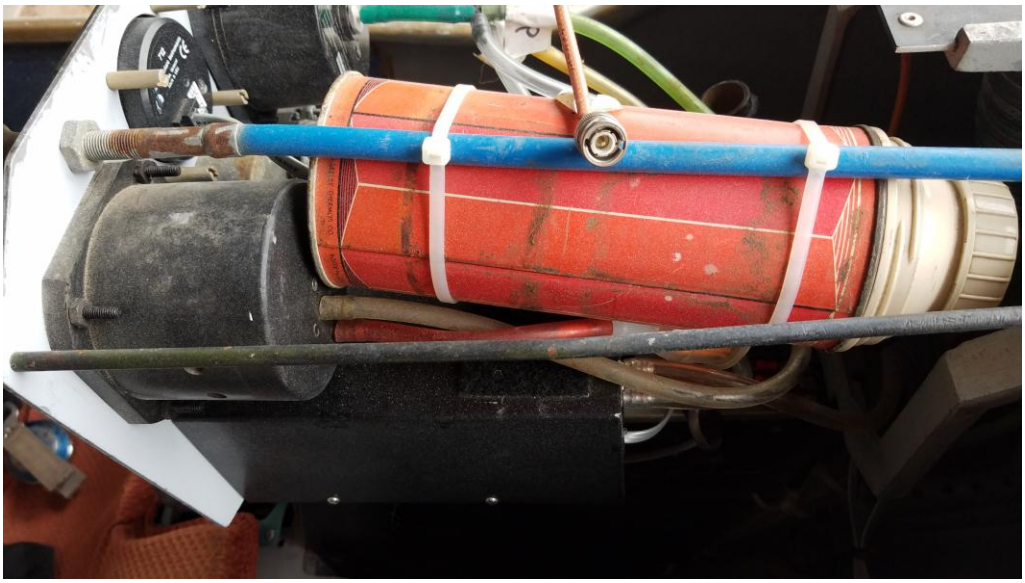

Previous technician saved some money by using a Thermos Bottle as a capacity flask.

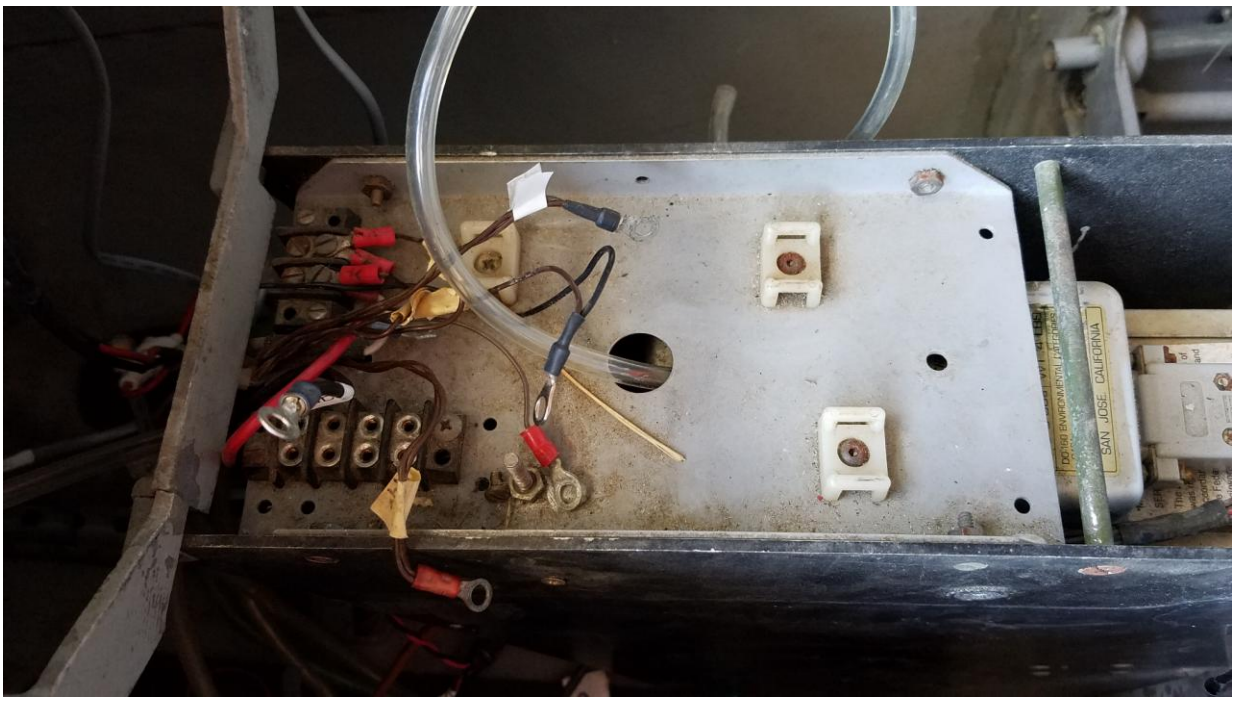

Old power distribution panel.

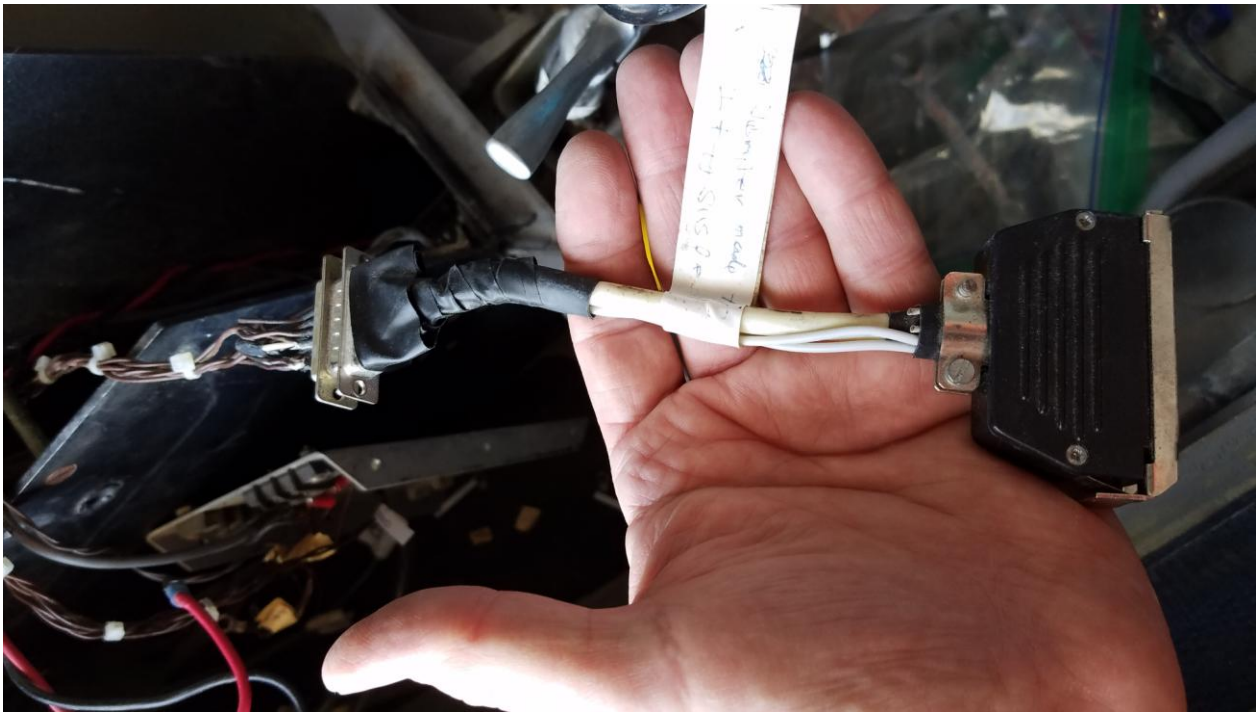

Old wiring harness with conversion jumper.

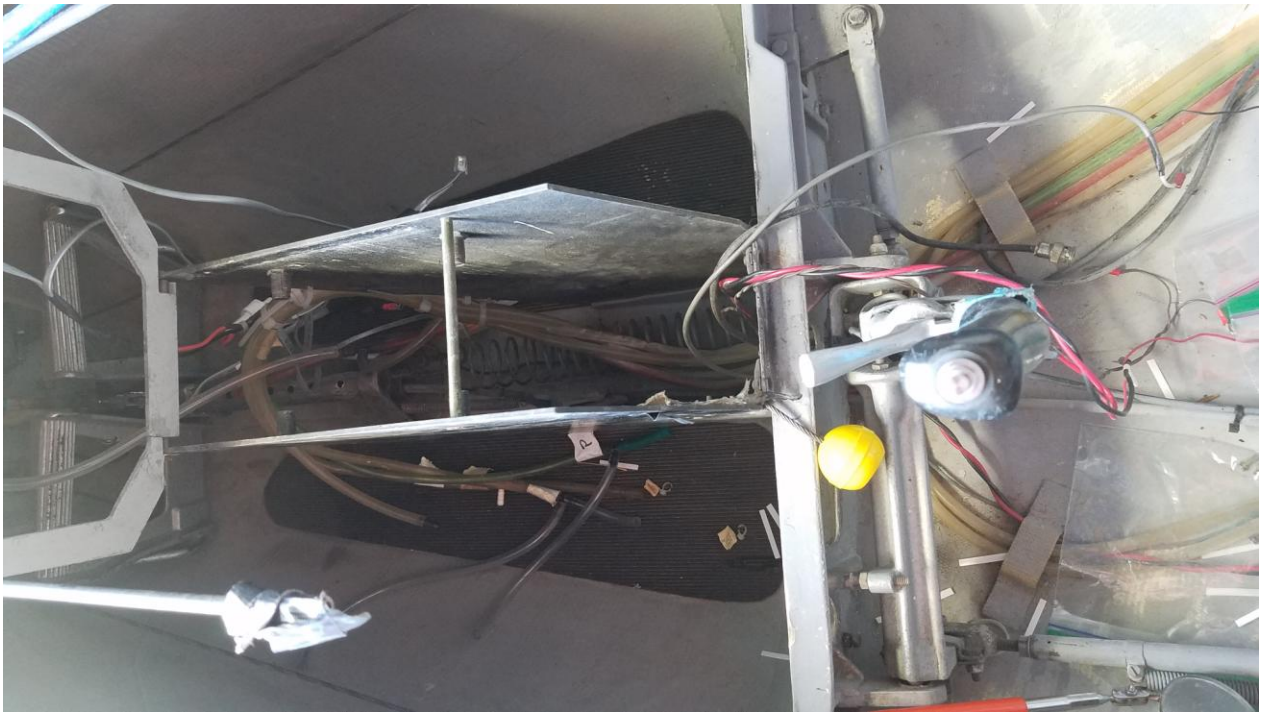

Gutted panel.

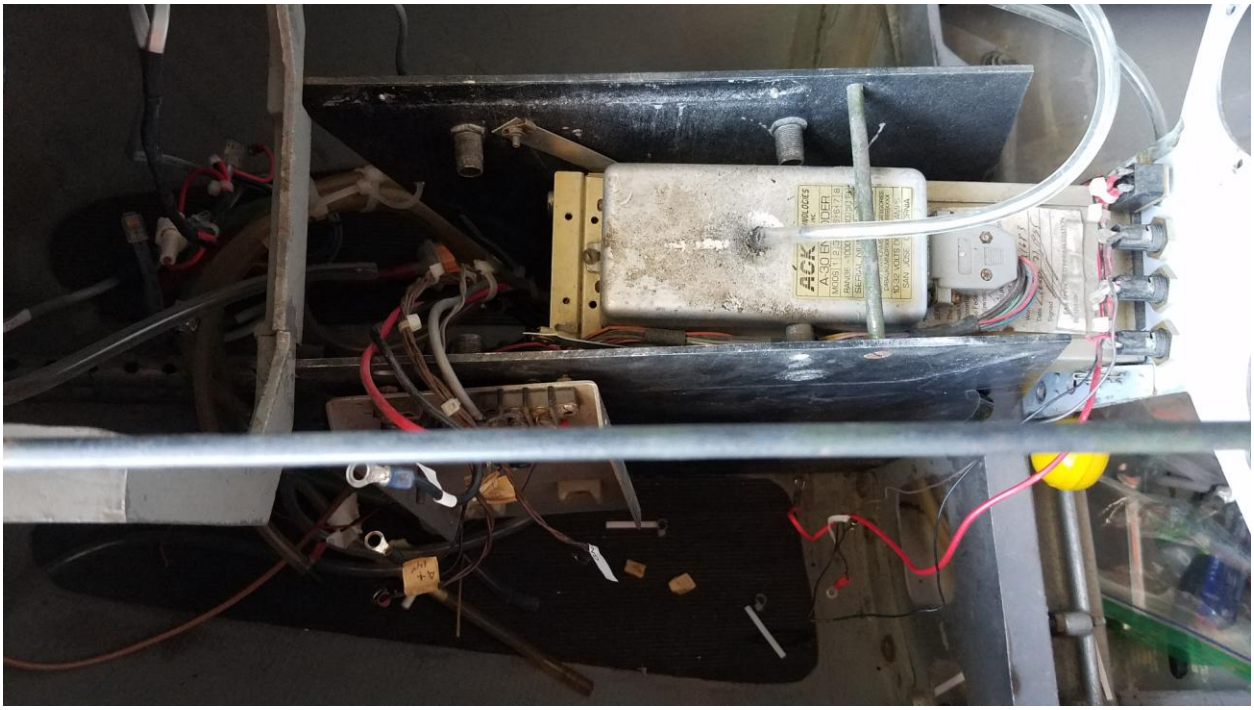

The long case for the Terra transponder must be supported in the back. Note the vertical support straps.

END